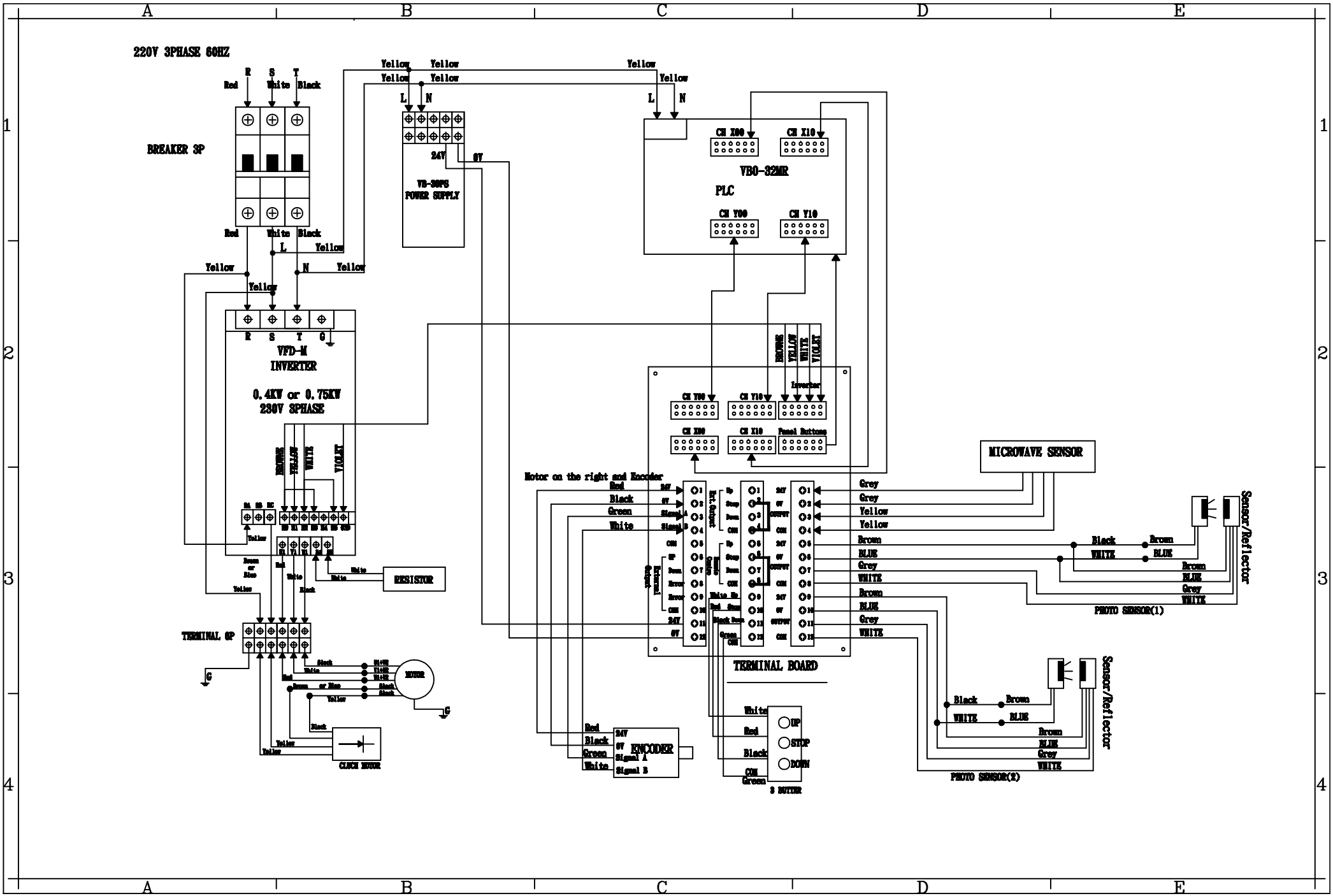
220V 3PHASE 60HZ
BREAKER 3P
VB-30PS
POWER SUPPLY
VB0-32MR
PLC
VFD-M
INVERTER
0.4KW or 0.75KW
230V 3PHASE
RESISTOR
TERMINAL 6P
MOTOR
CLUCH MOTOR
Motor on the right and Encoder
TERMINAL BOARD
MICROWAVE SENSOR
PHOTO SENSOR(1)
PHOTO SENSOR(2)
Sensor/Reflector
ENCODER
3 BUTTER
UP
STOP
DOWN